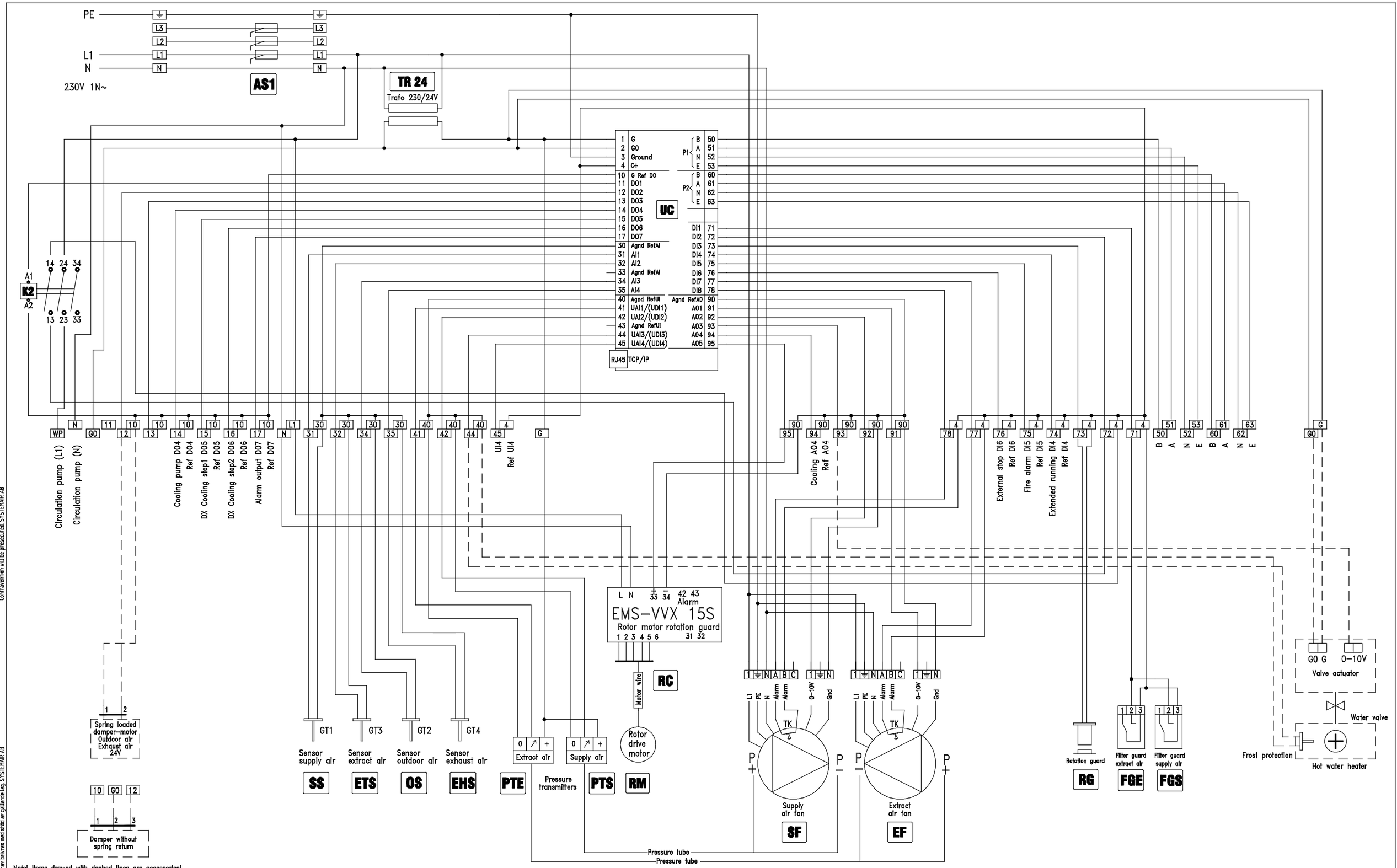

Note! Items drawed with dashed lines are accessories!

(Pressure tube connection when the unit is CAV controlled)

Fuse	TR 03	SR 03
AS 1	10 A	10 A

Det.–nr. Part.No.	Ant. Pc.	Benämning Name	Material	Mod.–nr Ämne Dimension	Anm. Note

Konstr. / Design	Rritad / Drawn	Kontr. / Checked	Standard	Godk. / App.	Skala / Scale	Ersättter / Replaces	Ersatt av / Replaced by
	TF		ISO		1:1		

systemair

Wiring diagram
Topvex SR/TR03-A
230V 1N~

Art.–nr. / Art.no.

Dat. / Date: 131211

Rltn.nr. / Drawing No.: 15054-122

Rev.: G

Nr. No.	Ant. Pc.	Ändring Amendment	Dat. Date	Sign.	Godk. App.	Nr. No.	Ant. Pc.	Ändring Amendment	Dat. Date	Sign.	Godk. App.

This document must not be copied without our written permission, and the contents thereof must not be imparted to a third party nor be used for any unauthorized purpose. Contravention will be prosecuted. SYSTEMAIR AB

Denna handling får ej utan vårt skriftliga medgivande kopieras. Den får ej heller delges annan eller eljest obehörigen användas. Överträdelse härav beivras med stöd av gällande lag. SYSTEMAIR AB